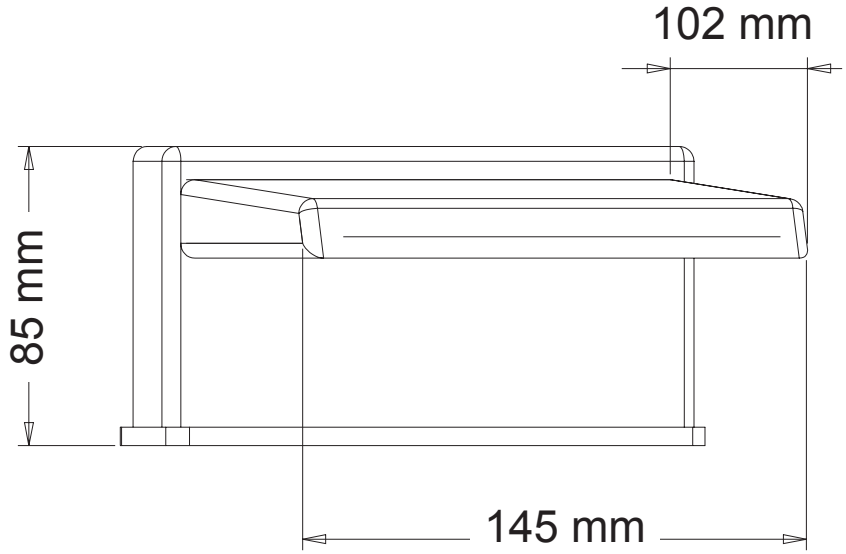
102 mm
85 mm
145 mm