carrara &matta®
The Professional's Choice

TESI

#100360000

DESCRIPTION

The Tesi is a long lasting, Durolux thermoset plastic seat designed specifically for the Ideal Standard Tesi suites. The seat fits all the Tesi pans that have been introduced. The Limited Access Hardware Kit supplied with the seat makes it the perfect choice for the wall mounted Tesi. The seat has the wrap-over cover design and maintains the original appearance of the Tesi line. For Residential or Commercial use.

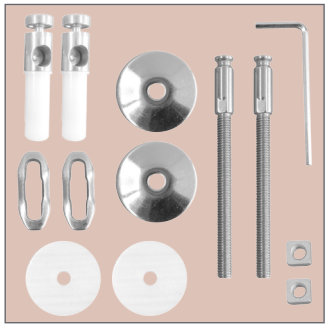

HARDWARE KIT

Standard and Limited Access Hardware Kit

- Patented kit provides secure seat mounting for pans with either limited access mounting holes as well as standard access mounting holes
- Top tightening

HINGES

Fixed Inox Take-Off Hinges

- Commercial-grade stainless steel hinges resist corrosion
- The take-off feature allows the seat to remove for easy cleaning

MATERIAL

Durolux

- Long-lasting, thermoset plastic with a ceramic-like shine
- Will not scratch with standard use
- Antibacterial

BUMPERS

- 4 non-slip bumpers on the ring
- 2 no-slip bumpers on the cover

APPLICATIONS

- Commercial Use
- Residential Use

COMMERCIAL / RESIDENTIAL DUROLUX TOILET SEAT

carrara &matta®
The Professional's Choice

TESI

#100360000

PACKAGING & WEIGHTS

Individual Unit

- Individual Seat Weight: 2.185 kg

Individual Packaged Unit

- Packaging: Corrugate Carton
- Packed Seat Weight: 2.435 kg
- Packaging Dimensions: 480 x 380 x 65 mm

Master Carton

- 5 Individual Units
- Weight: 12.725 kg
- Master Carton Dimensions: 390 x 345 x 490 mm

Pallets

- Euro Pallet (80 x 120 cm) Quantities: 120
- Standard Pallet (100 x 120 cm) Quantities: 180

SPECIFICATIONS

- Style: Closed Front, With Cover
- Size/Shape: Fits Ideal Standard Tesi
- Material: Durolux
- Hinges: Fixed Inox Take-Off
- Hardware Kit: Standard and Limited Access Hardware Kit
- Bumpers: Ring: 4 Non-Slip / Cover: 2 Non-Slip
- Suggested Uses: Commercial or Residential

CLEANING

Use warm, soapy water to clean your seat.

MADE IN

This seat is proudly manufactured in Great Britain.

AVAILABLE COLOURS

White

DIMENSIONS

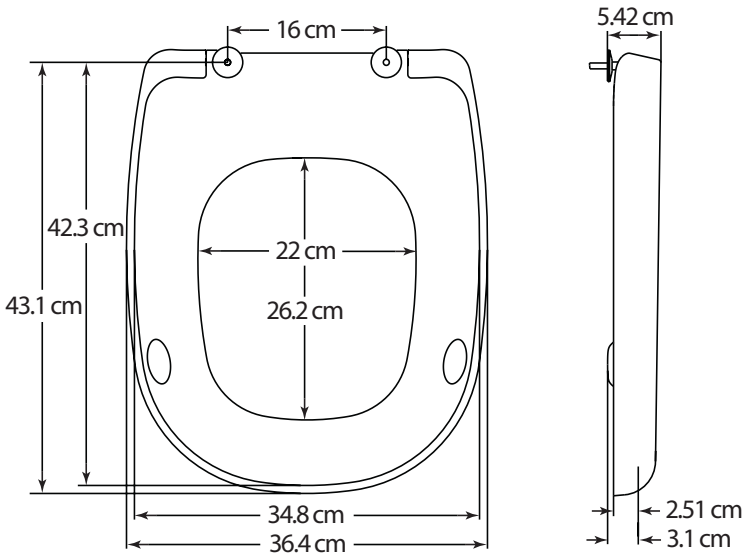

Bemis Limited - Carrara & Matta
Farrington Road Rossendale Road Industrial Estate, Burnley, Lancashire BB11 5SW
Tel. +44 0800 7833687
Fax +44 01282 412717
E-mail: sales@bemiseurope.com
www.BemisEurope.com